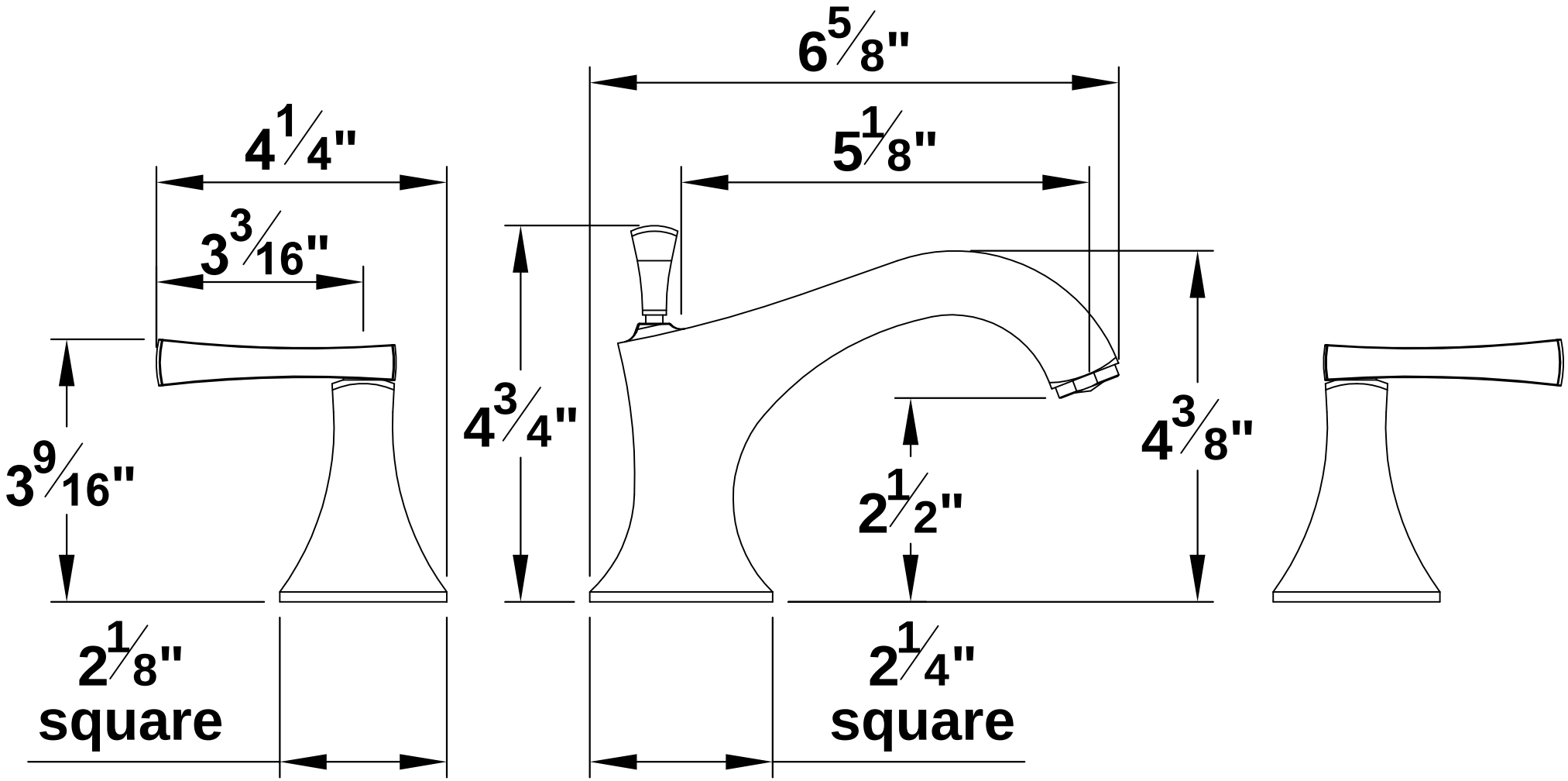
6 5/8"
4 1/4"
5 1/8"
3 3/16"
4 3/4"
4 3/8"
3 9/16"
2 1/2"
2 1/8"
square
2 1/4"
square